CUSTOMER DATASHEET

Printed: 10/12/2019
Product Management
Transportation Europe

Central Article Code:	C50019L04-A	Created:	29/09/2016
Local Code:	ELT9B	Modified:	13/12/2016

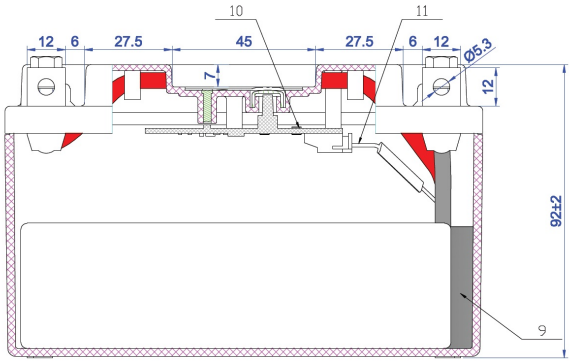

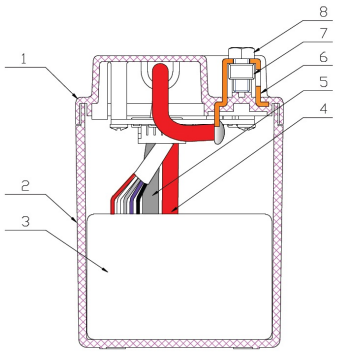

Final Outlook	C5004-A
Approval date	15/11/2016

PERFORMANCES

Voltage (V):	12 V	
C20 (Ah):	3.0	10 h
Cranking (A):	190	25º test
Charge:	CHARGED	
Technology:	Li-ion	
Grid:	LiFePO4	

STD. DIMENSIONS

Length (mm ± 2):	150
Width (mm ± 2):	65
Height (mm ± 2):	95
Total Weight (kg ± 5%):	0.70

All figures show nominal values. Tolerances are according to EN50342 and applicable European Regulations.

CONTAINER

Type:	C50	BLACK
Hold Down:	B0	
H.D. Adapter:	No	

COVER

Type:	Motorbike (centr ORANGE (Li-ion MC)
Polarity:	ETN 1
Terminals:	M12
Terminal Adapter:	No
SOCI:	Digital SOCI
Ventilation:	Central
Filter:	No
Lateral Plug:	No

PLUGS

Type:	1 x Not define	NOT SIGNIFICANT

HANDLES

Type: None

OTHERS

Degassing Tube: No

This document includes confidential data, is not contractual and could be changed without notice. Any use, copy or distribution has to be authorised in writing by EXIDE Technologies.