CUSTOMER DATASHEET

Printed: 03/04/2019
Product Management
Transportation Europe

Central Article Code:	GC2095G06-A	Created:	12/09/2008
Local Code:	ES1100-6	Modified:	20/03/2019

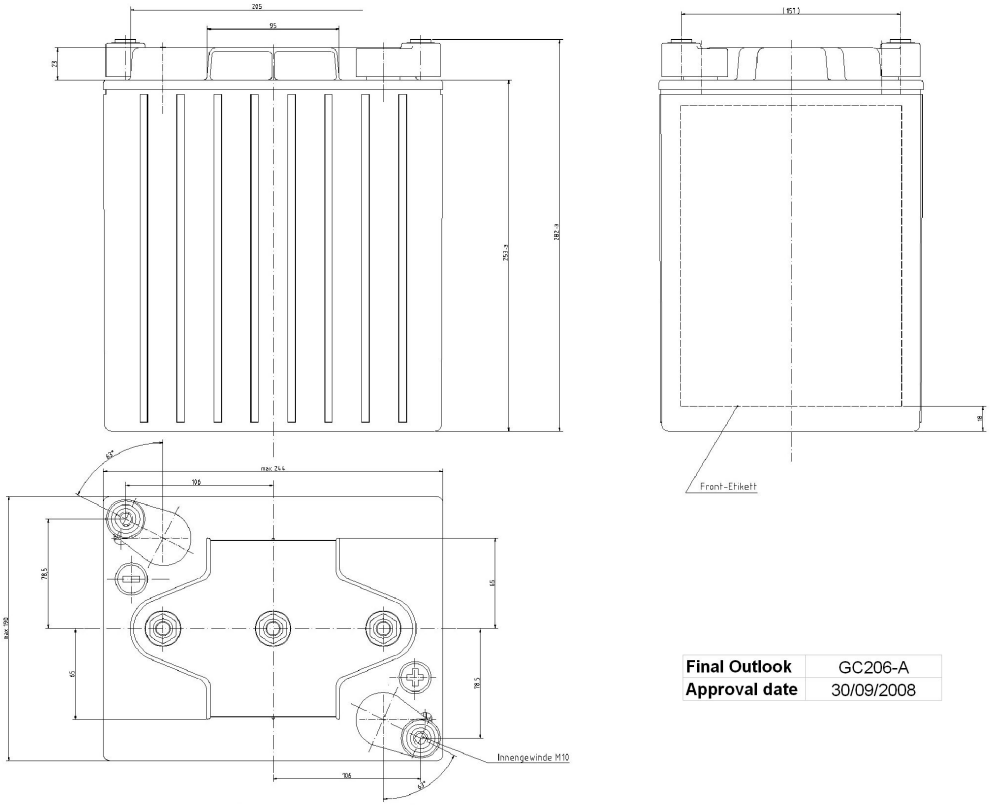

Final Outlook	GC206-A
Approval date	30/09/2008

PERFORMANCES

Voltage (V):	6 V	
C20 (Ah):	200.0	20 h
Cranking (A):	0	EN
Charge:	CHARGED	
Technology:	GEL	
Grid:	Ca/Ca	

STD. DIMENSIONS

Length (mm ± 2):	244
Width (mm ± 2):	190
Height (mm ± 2):	275
Total Weight (kg ± 5%):	30.50

All figures show nominal values. Tolerances are according to EN50342 and applicable European Regulations.

CONTAINER

Type:	GC2	BLACK
Hold Down:	B0	
H.D. Adapter:	No	

COVER

Type:	DIN	BLACK
Polarity:	ETN 0	
Terminals:	M10 thread pos.and neg.	
Terminal Adapter:	No	
SOCI:	No	
Ventilation:	Independent	
Filter:	No	
Lateral Plug:	No	

PLUGS

Type:	3 x M18 Valve	GREY MEDIUM

HANDLES

Type: None

OTHERS

Degassing Tube: No

This document includes confidential data, is not contractual and could be changed without notice. Any use, copy or distribution has to be authorised in writing by EXIDE Technologies.